WATERMAIN NOTES

1. ALL WATERMAIN PIPE OVER 300mm DIA. TO BE POLYVINYL CHLORIDE (PVC) C905, CLASS 165, DR25, ALL WATERMAIN PIPE UP TO AND INCLUDING 300mm DIA. TO BE POLYVINYL CHLORIDE (PVC) C900, CLASS 150 DR18. DUCTILE IRON (D.I.) CL51 AND RESPECTIVELY CL52 C/W POLYETHYLENE WRAP MAY BE USED IF APPROVED BY THE TOWN OF PETROLIA.
2. ALL WATERMAIN TO HAVE 1.7m TO 1.9m COVER.
3. WHERE COVER TO WATER SERVICES IS LESS THAN 1.5m, THE SERVICE SHALL BE ADEQUATELY INSULATED OVER THE AFFECTED LENGTH OF SERVICE, USING STYROFOAM HI-BRAND INSULATION OR APPROVED EQUIVALENT, 25mm THICK & 1.22m WIDE.
4. WHERE ANY WATER SERVICE CONNECTION IS REQUIRED TO BE MADE FOLLOWING THE CONSTRUCTION OF CURB, GUTTER, CONCRETE SIDEWALKS AND/OR WEARING SURFACE COAT OF ASPHALT ON ANY STREET IN A NEW DEVELOPMENT, SUCH WATER SERVICE CONNECTION SHALL NOT BE MADE USING "OPEN CUT" METHODS BUT SHALL BE MADE USING DRILLING OR BORING TECHNIQUES AND IN SUCH A MANNER AS TO ELIMINATE THE POSSIBILITY OF SETTLEMENT OF SUCH CURB, GUTTER, CONCRETE SIDEWALK OR WEARING SURFACE COAT OF ASPHALT; IT BEING UNDERSTOOD THAT THIS POLICY SHALL APPLY EXCEPT WHERE, IN THE OPINION OF THE TOWN ENGINEER, GROUND CONDITIONS ARE SUCH THAT THE USE OF DRILLING OR BORING METHODS BECOME UNREASONABLE OR UNECONOMICAL.
5. ALL WATERMAIN MATERIAL AND CONSTRUCTION SHALL CONFORM TO THE CURRENT MUNICIPALITY OF MIDDLESEX CENTRE STANDARDS FOR SEWER AND WATER.
6. ALL SERVICE CONNECTIONS TO BE 38mm DIAMETER PEX UNLESS NOTED OTHERWISE. GROUNDING ROD TO BE INSTALLED AT WATER METER IF CROSS-LINKED POLYETHYLENE IS USED.
7. MECHANICAL RESTRAINT JOINTS TO BE USED AT ALL FITTINGS, TEES, BENDS, DEAD ENDS AND HYDRANTS IN ACCORDANCE WITH THE MUNICIPALITY OF MIDDLESEX CENTRE WATERWORKS DESIGN AND CONSTRUCTION STANDARDS (LATEST REVISION). FOR WATERMAINS LARGER THAN 300mm OR INSTALLATION SITUATIONS NOT INCLUDED IN THE WATERWORKS DESIGN AND CONSTRUCTION STANDARDS, THE CONTRACTOR SHALL SUBMIT SHOP DRAWINGS WITH RESTRAINT AS RECOMMENDED BY THE PIPE MANUFACTURER FOR THE REVIEW AND APPROVAL OF THE MUNICIPALITY OF MIDDLESEX CENTRE.
8. ALL FIRE HYDRANTS SHALL BE 3-WAY HYDRANTS WITH STORZ CONNECTION OPENING COUNTER CLOCKWISE.
9. ALL WATERMAIN VALVES SHALL BE GATE VALVES MANUFACTURED TO AWWA C-500 AND EPOXY COATED TO AWWA C550. ALL VALVES TO OPEN COUNTER CLOCKWISE.
10. INSTALLATION, HYDROSTATIC TESTING, SWABBING, FLUSHING AND DISINFECTION SHALL BE DONE IN ACCORDANCE WITH THE TOWN OF PETROLIA GENERAL SPECIFICATIONS FOR WATER DISTRIBUTION SYSTEMS.

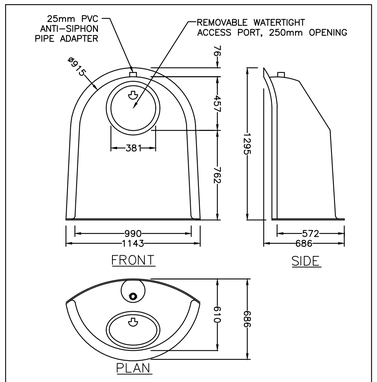

24R SNOUT OIL & DEBRIS STOP DETAIL
BETTER MANAGEMENT PRODUCTS INC.
N.T.S.

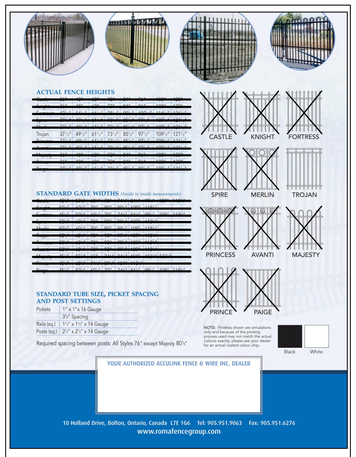

DECORATIVE FENCE DETAIL

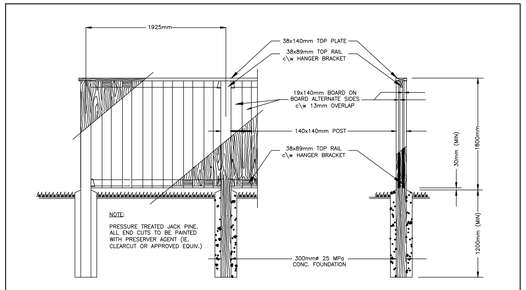

PRIVACY FENCE DETAIL

SEWER NOTES

1. ALL SEWER INSTALLATION SHALL BE IN ACCORDANCE WITH CURRENT MUNICIPALITY OF MIDDLESEX CENTRE STANDARDS AND THE PLUMBING CODE.
2. ALL SEWERS WITH DEPTHS UP TO 4.5m TO BE PVC SDR35 (OR APPROVED EQUAL) WITH TYPE 1 BEDDING. SEWERS WITH DEPTHS EXCEEDING 4.5m TO BE PVC SDR35 (OR APPROVED EQUAL) WITH TYPE 2 BEDDING.
3. REMOVE ALL TRENCH WATER WHEN PIPE INSTALLATION IS IN PROGRESS.
4. PULL THE MANDRELL (PIG) THROUGH THE PVC SEWERS IN THE PRESENCE OF THE ENGINEER.
5. ALL PDC'S SHALL BE INSTALLED AT A MINIMUM OF 2% GRADE TO 1.5m INSIDE BUILDING WALL. ALL WATER SERVICES SHALL BE INSTALLED TO 1.0m OUTSIDE BUILDING WALL. ALL SERVICES SHALL BE MARKED WITH A PAINTED 50x100 MARKER FROM INVERT TO 1m ABOVE GRADE.
6. RECOMMENDED PAVEMENT STRUCTURE:

   PRIVATE ROAD CONSTRUCTION
   300mm GRANULAR 'B' – 100% SPMDD
   150mm GRANULAR 'A' – 100% SPMDD
   45mm HL-8 – 97% MARSHALL
   35mm HL-3 – 97% MARSHALL
   OPSS FORMS 310 & 1150

   RESTORATION NOTE:
   ALL DISTURBED AREA TO BE RESTORED TO EXISTING CONDITION OR BETTER AS PER MUNICIPALITY OF MIDDLESEX CENTRE STANDARDS. MILL EXISTING ASPHALT 500mm WIDE BY 50mm DEEP ADJACENT TO ALL ASPHALT AND CURB RESTORATION.
   MUNICIPAL ROAD
   300mm GRANULAR 'B' – 100% SPMDD
   150mm GRANULAR 'A' – 100% SPMDD
   50mm HL-8 – 97% MARSHALL
   40mm HL-3 – 97% MARSHALL
   DRIVEWAYS & PARKING LOT
   300mm GRANULAR 'B' – 100% SPMDD
   150mm GRANULAR 'A' – 100% SPMDD
   40mm HL-8 – 97% MARSHALL
   40mm HL-3 – 97% MARSHALL
   SIDEWALKS
   100mm CONCRETE
   100mm GRANULAR 'A' – 100% SPMDD
   BOULEVARDS
   300mm TOPSOIL AND SOD
7. ALL PDC'S SHALL BE CONNECTED TO THE MAINLINE SEWER WITH A 'Y' CONNECTION AND A LONG SWEEP BEND.
8. THE MINIMUM DEPTH OF STORM AND SANITARY SEWER SHALL BE 1.5m FROM THE FINISHED GROUND ELEVATION TO THE OBVERT OF THE PIPE. WHERE THE MINIMUM CANNOT BE ACHIEVED, STYROFOAM HI-BRAND INSULATION OR APPROVED EQUIVALENT IS REQUIRED.

REPORTS:

GEOTECHNICAL INVESTIGATION & HYDROGEOLOGICAL ASSESSMENT
PREPARED BY: LDS CONSULTANTS
DATED: NOVEMBER 3, 2022
REPORT #: GE-00285

STORMWATER SERVICING BRIEF
PREPARED BY: LDS CONSULTANTS
DATED: NOVEMBER 22, 2022
PROJECT NO. LD-00203

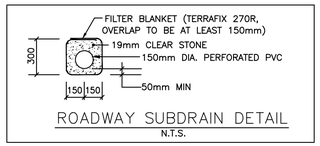

ROADWAY SUBDRAIN DETAIL
N.T.S.

NOTE:

1. TRENCH CONSTRUCTION IS TO BE IN ACCORDANCE WITH THE LATEST SPECIFICATIONS REGARDING THE TRENCH WIDTH. (Ont. Reg. 213/91).
2. TYPICAL CROSS SECTIONS ARE FOR TYPE 1 OR 2 SOILS. EXCAVATION WITHIN TYPE 3 SOILS IS TO BE CARRIED OUT USING SIDE SLOPES OF 1:1 FROM THE BOTTOM OF THE EXCAVATION. SIDE SLOPES OF 3:1 OR FLATTER ARE TO BE USED FOR EXCAVATIONS IN TYPE 4 SOILS.
3. 19mm CLEAR STONE BEDDING ENCLOSED WITH A SUITABLE GEOTEXTILE (TERRAFIX 270R OR APPROVED EQUAL, IN ACCORDANCE WITH OPSS 1860.) TO BE USED WHERE HYDRAULIC GRADIENT CONDITIONS ARE ANTICIPATED WITH STANDARD BEDDING AS NOTED ON THE PLAN AND PROFILE DRAWINGS BEING USED IN ALL OTHER AREAS, ALL AS RECOMMENDED BY THE GEOTECHNICAL ENGINEER.

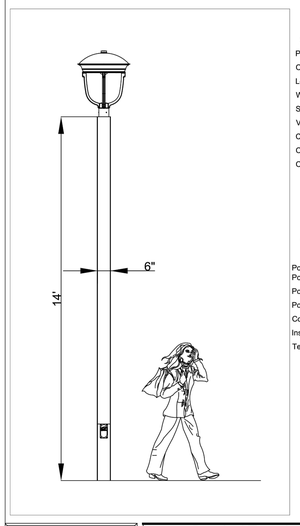

Luminaire Specifications
SRA400H L3 55 or 70W LED 3.0K 120 BKTX PTL

Product	-	Quattro SRA400H
Optic	-	TYPE III - 3000K
Lens	-	FLAT GLASS
Watt	-	55 W or 70 W
Source	-	LED
Voltage	-	120
Color	-	BKTX - Black
Option	-	Surge Protection 10 Deg. Tilt
Option	-	T-Lock PhotoCell Recepticle

Pole Specifications
Quattro - AP6C - 14' - BKTX - DB4 - PTR4.0

Pole Material	-	Aluminum
Pole Shape	-	Round Straight
Pole Diameter	-	6"
Pole Height	-	14' AG
Colour	-	BKTX Black
Installation	-	Direct Bury 48"
Tenon	-	4" OD x 3" High

AMBER-LEE LIGHTING SALES
London, Ontario
Sales @ Amber-LeeLighting.com
Phone: (519) 860-0505

Condo / Townhouse
6" Straight Round Pole SRA400H
Approval Drawing
LED SRA 400H | Date: Dec 2019

NOTES TO CONTRACTOR

1. CONTRACTOR TO VERIFY LOCATION OF ALL EXISTING UTILITIES PRIOR TO CONSTRUCTION.
2. ALL ORGANIC, UNSTABLE OR UNSUITABLE MATERIALS BENEATH THE ROAD ALLOWANCES OR HOUSE FOUNDATIONS MUST BE REMOVED AND THESE AREAS BACKFILLED WITH AN APPROVED FILL MATERIAL, ALL TO THE SATISFACTION OF THE GEOTECHNICAL ENGINEER.
3. THE CONTRACTOR IS TO NOTIFY LDS ENGINEERING INC. AND THE MUNICIPALITY OF MIDDLESEX CENTRE 48 HOURS PRIOR TO COMMENCING CONSTRUCTION WITHIN THE EXISTING ROAD ALLOWANCE.
4. WITHIN THE LIMITS OF THE EXISTING ROAD ALLOWANCE, THE CONTRACTOR SHALL REMOVE ALL CONCRETE, ASPHALT, UNUSED AND UNSUITABLE MATERIAL AS REQUIRED AND DISPOSE OFF SITE.
5. WHERE ADJACENT MANHOLES ARE LOCATED IN CLOSE PROXIMITY TO ONE ANOTHER, THE AREA BETWEEN THE ADJACENT MANHOLES SHALL BE BACKFILLED IN ACCORDANCE WITH THE SPECIFICATIONS IN THE FOLLOWING TABLE;

DISTANCE BETWEEN ADJACENT MANHOLES	MATERIAL
600mm OR LESS	CONCRETE OR CRUSHED STONE
600mm TO 2400mm	GRANULAR MATERIALS
MORE THAN 2400mm	APPROVED NATIVE MATERIAL

THE ABOVE-NOTED BACKFILL SHALL BE COMPACTED TO THE STANDARD PROCTOR DENSITY SPECIFIED IN THE SOILS REPORT, OR AS APPROVED BY THE MUNICIPALITY'S ENGINEER.

6. THE LIDS OF ALL RYCB's ARE TO BE INSTALLED SO THAT THE INLET GRATES ARE LOCATED ENTIRELY ON ONE PROPERTY, TO AVOID INTERFERENCE BY FENCES.
7. ALL SUBSTITUTIONS MUST BE APPROVED BY THE ENGINEER.
8. ON EXCAVATIONS IN WHICH EXISTING CURBS ARE AFFECTED, GRAN B SHALL EXTEND 300mm BEHIND THE BACK OF CURBS AS PART OF THE RESTORATION.
9. ALL MANHOLES ARE TO BE SET TO BASE COAT ELEVATION. THE MANHOLES WILL BE RAISED TO TOP COAT ELEVATION AFTER ALL UNITS HAVE BEEN CONSTRUCTED.
10. THE ACCURACY OF THE SURFACE AND SUBSURFACE DETILS SHOWN ON THE DRAWINGS ARE NOT GUARANTEED. THE CONTRACTOR SHALL INVESTIGATE AND VERIFY FOR HIMSELF WHETHER THE INFORMATION IS CORRECT AND COMPLETE.
11. REFER TO SITE PLAN PREPARED BY LDS ENGINEERING INC. FOR LAYOUT OF CURBS, RAMPS, SIDEWALKS, PARKING AND BUILDINGS.

THE FOLLOWING OPSD STANDARDS SHALL BE USED ON THIS DEVELOPMENT:

OPSD-400.020	CATCHBASIN, CAST IRON, FRAME AND FLAT SQUARE GRATE
OPSD-400.090	CATCHBASIN, CAST IRON CURB INLET OVERFLOW PLATE
OPSD-401.010	MAINTENANCE HOLE, CAST IRON COVER & SQUARE FRAME
OPSD-404.020	SAFETY GRATING, ALUMINUM FOR CIRCULAR MANHOLES
OPSD-405.010	MANHOLE STEPS-HOLLOW
OPSD-405.020	MANHOLE STEPS-SOLID
OPSD-600.040	CONCRETE BARRIER CURB WITH STANDARD GUTTER
OPSD-600.100	CONCRETE SEMI-MOUNTABLE CURB WITH NARROW GUTTER
OPSD-604.010	90° CONCRETE OUTLET FOR CONCRETE CURB AND GUTTER
OPSD-701.010	PRECAST MAINTENANCE MANHOLE 1200mm DIA.
OPSD-701.011	PRECAST MAINTENANCE MANHOLE 1500mm DIA.
OPSD-701.013	PRECAST MAINTENANCE MANHOLE 2400mm DIA.
OPSD-701.021	MAINTENANCE HOLE BENCHING AND PIPE OPENING DETAILS
OPSD-701.030	PRECAST CONCRETE MANHOLE COMPONENTS 1200mm DIA.
OPSD-701.040	PRECAST CONCRETE MANHOLE COMPONENTS 1500mm DIA.
OPSD-701.060	PRECAST CONCRETE MANHOLE COMPONENTS 2400mm DIA.
OPSD-705.010	PRECAST CONCRETE CATCHBASIN 600 x 600, DEPTH-4.0m MAX.
OPSD-705.030	PRECAST CONCRETE DITCH INLET 600 x 600
OPSD-708.010	CATCHBASIN CONNECTION RIGID PIPE SEWER
OPSD-708.030	CATCHBASIN CONNECTION FLEXIBLE PIPE SEWER
OPSD-972.130	CHAIN LINK SECURITY FENCE

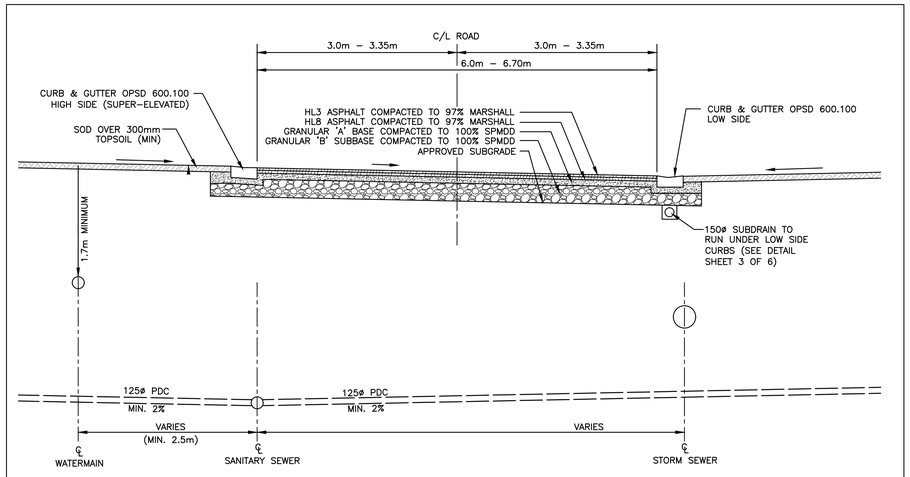

TYPICAL CROSS-SECTION
N.T.S.

EXISTING SERVICES	DRAWING #, SOURCE	DATE	CONSTRUCTED SERVICES	COMPLETION

DETAILS	
DESIGN	SB
DRAWN BY	SB
CHECKED	AH
APPROVED	AG
DATE	2022-11-24
00203-Servicing.dwg	

No.	REVISIONS	DATE	CONSULTANT
1	DRIPLINE SURVEY	JULY 2021	LDS

CONSULTANT OR DIVISION: LDS

ENGINEER'S STAMP: LICENSED PROFESSIONAL ENGINEER — A. H. CUBBELS — NOV. 2022 — PROVINCE OF ONTARIO

middlesex centre — in the centre of it all

SCALE: NOT TO SCALE

TITLE: ELMHURST STREET, KILWORTH
SWEID HOLDING INC.

GENERAL NOTES AND TYPICAL DETAILS

PROJECT No. LD-00203
SHEET No. 5 of 5
PLAN FILE No.

20.1811-00203 - ELMHURST, KILWORTH\CIVIL DESIGN\ACAD\CIVIL3D\SHEET FILES\00203-SERVICING.DWG
2022-11-24 11:22:41 AM by SCOTT HANGS